Exploded

H3006 Shoulder Press

please note :prats didn't demolitionde part and fast eners not listde on the introduction

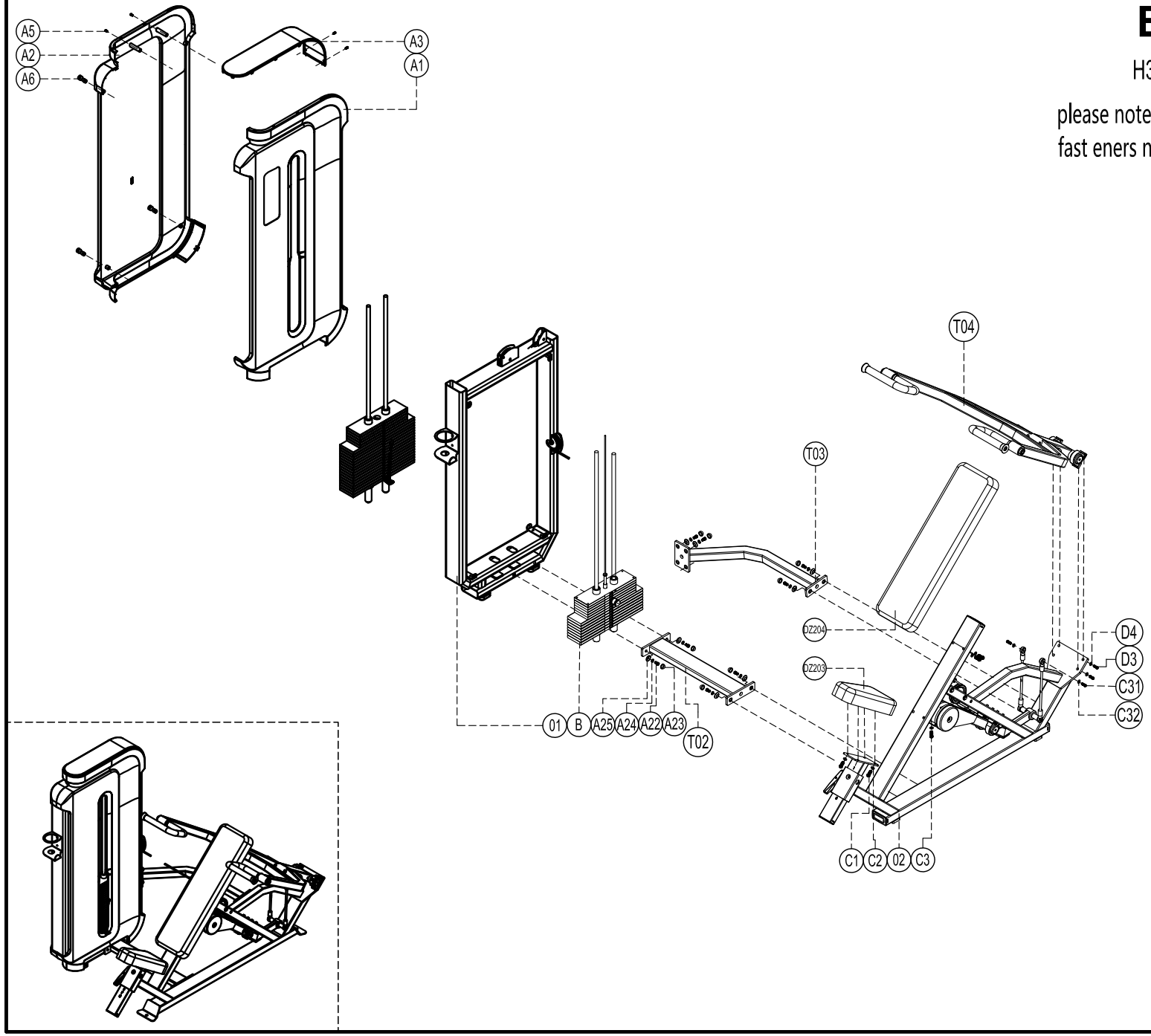

No.	Name	Qty
DZ204	Backrest T75*250*900	1
DZ203	Upholstery T75*217*370	1
D4	Flat washer Φ10	2
D3	Socket Cap inner hex M10*25	2
C32	Flat washerΦ12	2
C31	Outer hex screw M12*30	2
C3	Cup head inner hex screw M8*80	4
C2	Flat washer Φ8.3*Φ20*T1.5	8
C1	Cup head inner hex screw M8*35	4
B	weight stack set	1
A25	Gasket DQ003 φ29.8*φ12*T4	10
A24	Spring washer ø12	10
A23	Screw cap S208	10
A22	Outer hex screw M12*35	10
A6	Cup head inner hex screw M5*15	8
A5	Cup head cross tapping screw ST3*8	4
A3	Top cover	1
A2	Back shroud	1
A1	Front shroud	1
T04	Raising shelf set	1
T02	Bottom connector	1
01	Door frame	1
T03	Connector	1
02	Main frame	1